Signet 4150 Turbidimeter

The Signet 4150 Turbidimeter system provides accurate and reliable compliant water quality monitoring for municipal and industrial applications.

The 4150 measures turbidity via a 90 degree light which reflects particles as they flow through a small volume, low flow glass cuvette. Air bubbles are eliminated from the cuvette by adjusting the backpressure valve on the outlet tube. The cuvette is located in a watertight dark chamber for continuously accurate on-line measurement. A replaceable desiccant pack provides a dry-stable environment to ensure reliable measurements.

Simple and fast calibration can be accomplished in under five minutes by placing the in-line glass cuvette from the measuring chamber into the cuvette holder while still in service and the inlet and outlet tubing remains connected. The inexpensive calibration standard allows for dry and multiple system calibrations without mixing chemicals. After calibration, the unit is up and running with simple re-insertion of the glass cuvette back into the measuring chamber.

Additional features include a message indicator when the desiccant needs replacing and as an option, auto/ultrasonic cleaning of the glass in-line cuvette for longer runs between maintenance.

The 4150 is available in two measuring ranges. The 0 to 100 NTU/FNU version is for low range applications such as drinking water. The 0 to 1000 NTU/FNU range can be used for various applications including raw water and wastewater reclamation.

Features

- **Simple and easy single unit installation with built-in pressure regulator**
- **Versions compliant with either U.S. EPA 180.1 for North and South America and Asia or ISO 7027 for Europe**
- **Time saving and efficiencies of cuvette technology simplifies calibration**
- **Spannable 4 to 20 mA output or RS 485 output**
- **Two adjustable alarm relays**
- **Bright backlit display**
- **Easy access for wiring and maintenance**
- **Ultrasonic cleaning option ensures long and steady on-line measurement**
- **Inexpensive standards allow for multiple system calibrations**

Applications

- **Monitor Filter Performance**
- **Raw or Filtered Water**
- **Municipal Water Distribution**
- **Wastewater Reclamation and Tertiary Effluent**
- **Aquatic Life Support**

Specifications

General		
Flow Rate Range	0.1 L/min to 1 L/min (0.026 GPM to 0.26 GPM)	
Measurement Range	0 to 100.0 NTU/FNU or 0 to 1000.0 NTU/FNU	
Accuracy	±2% of reading or ±0.02 NTU/FNU below 40 NTU/FNU whichever is greater	
	±5% of reading above 40 NTU/FNU	
	NTU = FNU = FTU	
Mounting		
	Horizontal plane, integral mounting bracket (with standard hole pattern)	
	Use 8 mm (5/16") OD, 5 mm (3/16") ID flexible tubing for the water supply/outlet (customer supplied)	
Resolution		
	up to 0.0001 NTU/FNU (below 10 NTU/FNU)	
Display		
	Two-Line LCD w/backlight	
Alarm Relays		
	120-240 VAC, 2A Form C Relay	
Analog Signal w/Field Selectable Range		
	Active 4-20 mA, 600 Ω or RS485	
Wetted Materials		
Tubing	Vinyl	
Measuring Cuvette	Borosilicate Glass	
Glass Washer Seal	Silicone	
Pressure Regulator	Polypropylene 316 stainless steel Delrin® by Dupont™	
Inlet Tube	316 stainless steel	
Maximum Inlet Pressure		
	345 kPa (50 psi) based on tubing connection provided	
	Pressure regulator rated up to 200 psi	
	50 PSI limit for tubing connector	
Power Supply		
	100 – 240 VAC, 47 – 63 Hz, 80 VA	
Insulation Rating		
	Double Insulated	
	Pollution Degree 2	
	Overvoltage Category II	
Altitude		
	2000 meters (6,561 ft) maximum	
Relative Humidity		
	Maximum 95% RH non-condensing	
Enclosure Rating		
Power Supply Box	NEMA 4X / IP66	
Operating Temperature/Pressure		
	1 °C to 50 °C	34 °F to 122 °F
	(5 to 15 psig) 35 to 104 kPa	
Environmental Conditions		
	Not recommended for outdoor use	
Shipping Weight		
	2.5 kg	5.5 lb
Standards and Approvals		
	CE	
	China RoHS	
	Compliant to U.S. EPA 180.1 for white light	
	Compliant to PN EN ISO 7027 for infrared light	
	ETL Listed UL 61010-1, cETL and CSA C22.2 No. 61010-1	

Dimensions

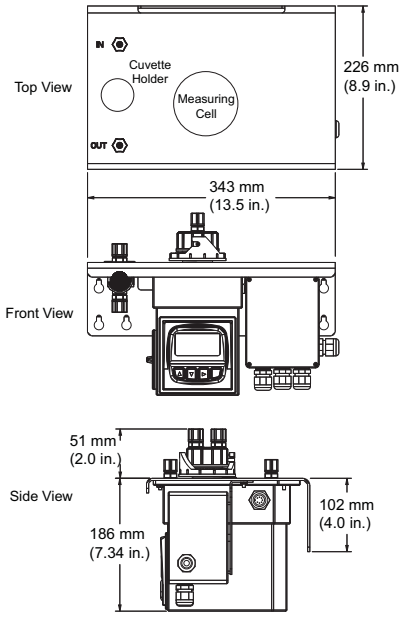

System Overview

Signet 4150 Turbidimeter

1 - Mounting Bracket
2 - Power Supply and Wiring Terminals
3 - Operator Interface with Display
4 - Desiccant Access (not shown)
5 - In-line Glass Cuvette (with Ultrasonic option)
6 - Backpressure Valve
7 - Cuvette Holder
8 - Shutoff Clamp
9 - Tubing and Fittings
10 - Measuring Cell Chamber

4150-0004
Glass cuvette with ultrasonic transducer

4150-0007
Glass cuvette without ultrasonic transducer (not shown)

Ordering Information

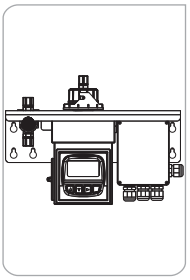

Mfr. Part No.	Code	Measurement Range and Self Cleaning Options
3-4150-1	**159 001 596**	White Light, 0 to 1000 NTU/FNU, no self cleaning U.S. EPA 180.1
3-4150-2	**159 001 597**	Infrared, 0 to 1000 NTU/FNU, no self cleaning ISO 7027
3-4150-3	**159 001 598**	White Light, 0 to 100 NTU/FNU, w/ultrasonic auto self cleaning U.S. EPA 180.1
3-4150-4	**159 001 599**	Infrared, 0 to 100 NTU/FNU with ultrasonic auto self cleaning ISO 7027
3-4150-5	**159 001 600**	White Light, 0 to 1000 NTU/FNU, w/ultrasonic auto self cleaning U.S. EPA 180.1
3-4150-6	**159 001 601**	Infrared, 0 to 1000 NTU/FNU with ultrasonic auto self cleaning ISO 7027

Accessories and Replacement Parts

Mfr. Part No.	Code	Description
3822-4001	**159 001 585**	Calibration kit, turbidity, 100, 10 & 0.02 NTU/FNU
3822-4003	**159 001 586**	Calibration kit, turbidity, 1000, 10 & 0.02 NTU/FNU
3-4150.380	**159 001 588**	Replacement desiccant
3822-4002	**159 001 591**	Formazin stock kit
3822-4000	**159 001 592**	Formazin stock solution, 4000 NTU/FNU, 500 ml
4150-0007	**159 001 602**	Replacement cuvette set (3 glass cuvettes)
4150-0004	**159 001 589**	Replacement cuvette with ultrasonic transducer
3-4150-24V	**159 001 723**	24 volt power supply
3-4150.382	**159 001 650**	Lamp replacement kit, turbidity, white
3-4150.386	**159 001 652**	O-ring kit for cuvette
4150-0001	**159 001 593**	Pressure regulator
4150-0003	**159 001 587**	Stilling/bubble chamber
4150-0005	**159 001 595**	Tubing kit (1-shutoff clamp, 1-backpressure valve, 2-connecting tubing, drain vent)

3-4150.099 Rev F (06/12)
© Georg Fischer Signet LLC
3401 Aerojet Avenue, El Monte, CA 91731-2882 U.S.A. • Tel. (626) 571-2770 • Fax (626) 573-2057 • www.gfsignet.com • e-mail: signet.ps@georgfischer.com
Specifications subject to change without notice. All rights reserved. All corporate names and trademarks stated herein are the property of their respective companies.